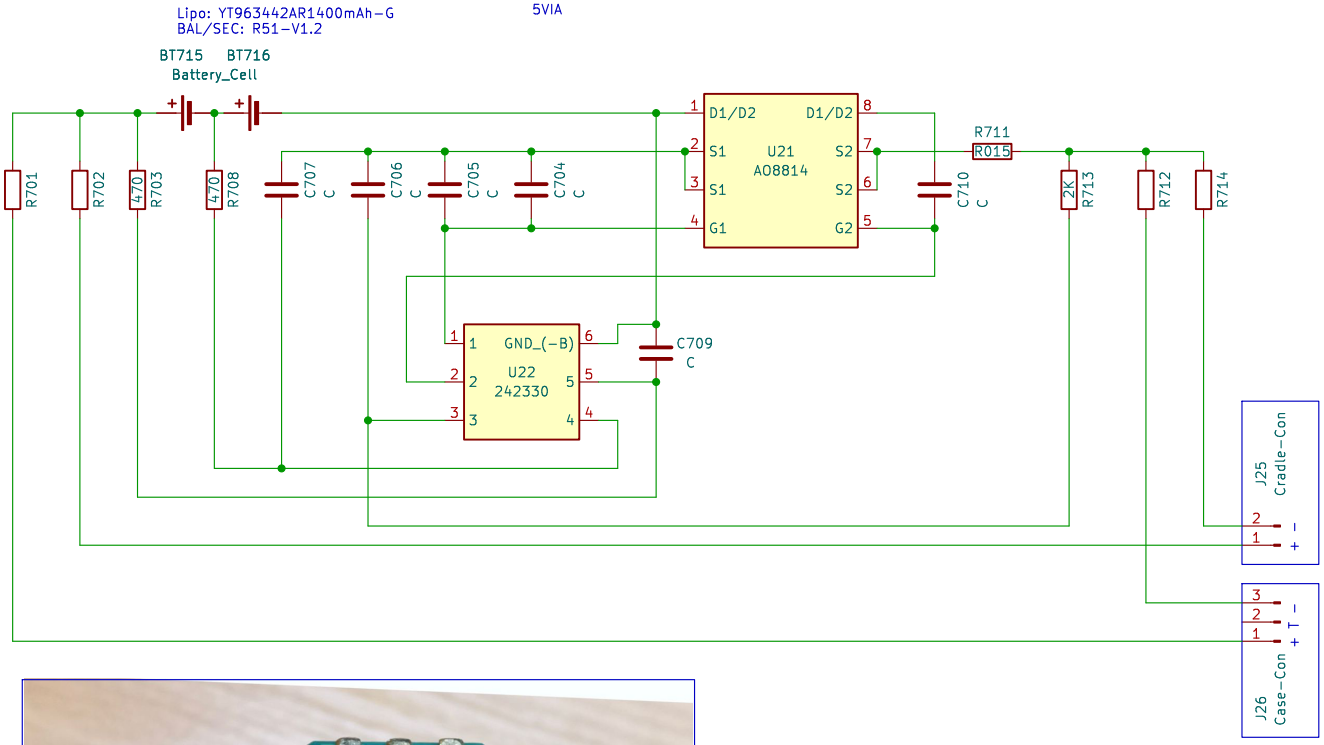

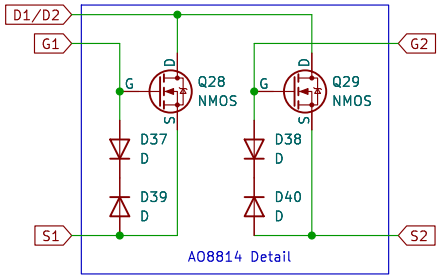

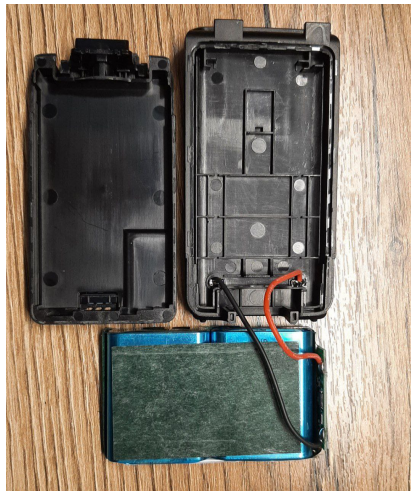

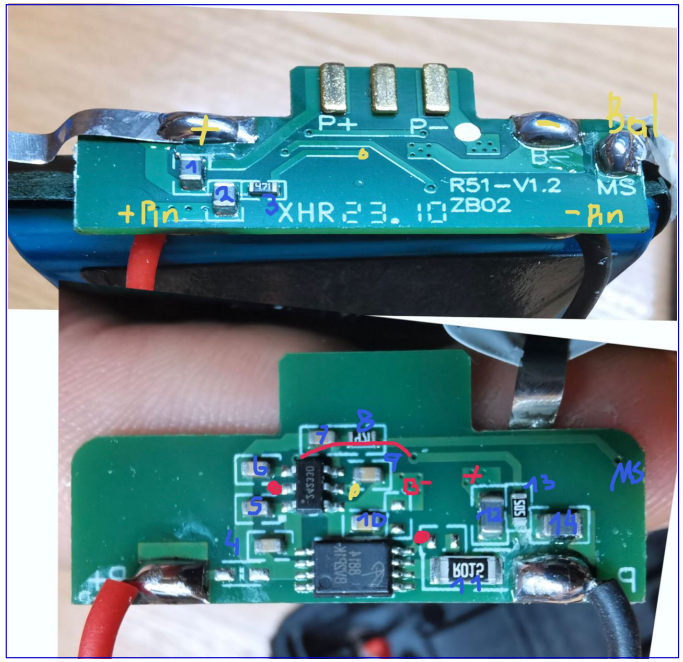

Numbering starts with 7xx

XHR 23.10
R51-V1.2

Sheet: /Akku/
File: Akku.kicad_sch

Title: Accu

Size: A4	Date: 2023-09-11	**Rev: ludwich**
KiCad E.D.A. kicad 7.0.7		Id: 4/14